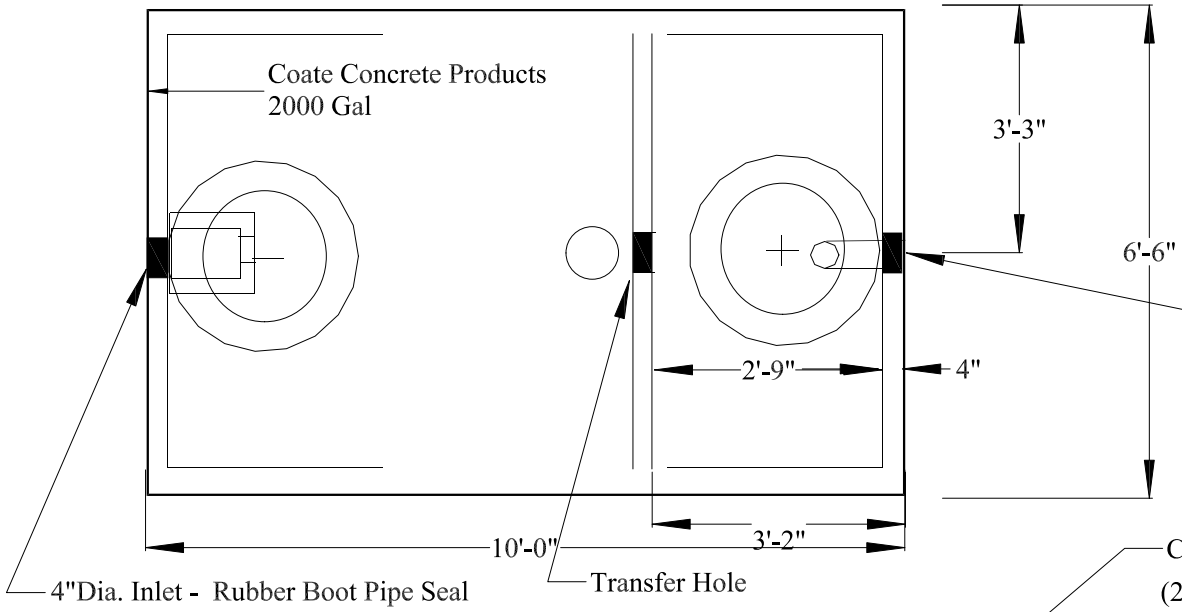

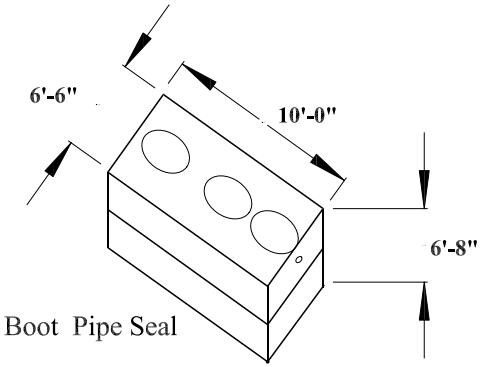

ASSEMBLED TANK

Concrete Access Risers & Lids (Cast In Place)
(2) Required

Optional: 24"I.D. Pvc Access Risers & Lids
(w/ Ring Adapters Cast In Place)
(2) Required

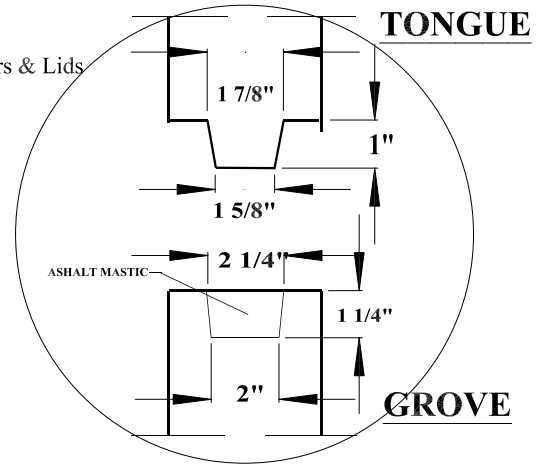

JOINT DETAIL

SCALE: NONE

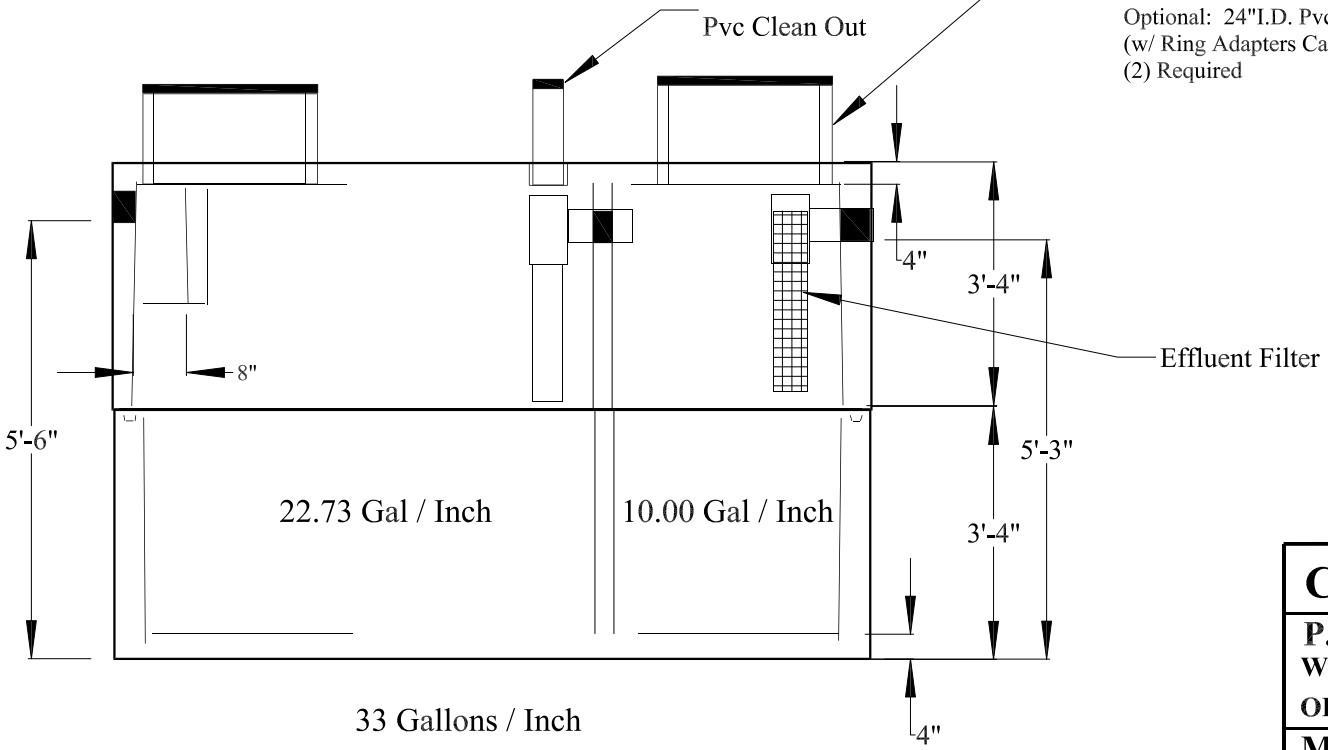

33 Gallons / Inch

COATE CONCRETE PRODUCTS	
P. O. BOX 159, WEST MILTON, OH 45383 **WEST MILTON PHONE: (937) 698-4181** **OHIO WATS PHONE: (800) 762-4066**	
MODEL: 2000 GALLON TANK	
MATERIAL: VIBRATED CONCRETE REINFORCED W/ 6X6" 6/6 WIRE MESH & #4 (1/2") REBAR	
SCALE: 3/8" = 1'-0" UNLESS OTHERWISE NOTED	
DR. BY: RVA	**DATE: 12/23/2015**
DWG. No: 01-2000DC-A01	**SHEET 1 OF 1**

DATE	REV.	LOC.	DESCRIPTION